QEJ027

GYM20 R / L ※-※※ Assembly Instruction

A

Modular Blade

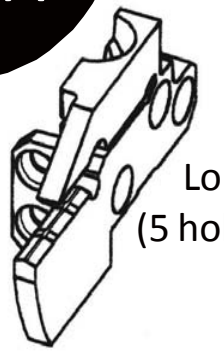

Long
(5 holes)

Medium
& Short
(4 holes)

GY M20R B - F 18
GY M20R A - F 10

Holder

GYHR2020K00- M20R
GYHRUS12C00- M20R

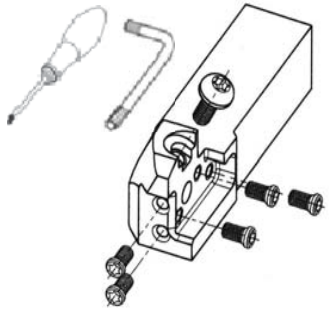

Insert

GY2M0300 F 040N-MS
GY2M0318 F 030N-GM

B

Screws : TS407
Wrench : TKY15D
Torque : 3.5 Nm
31 lbf-in

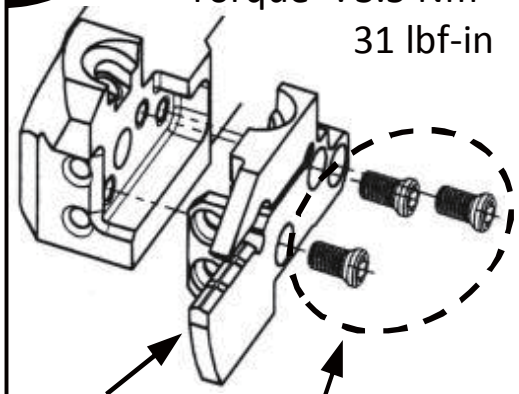

Long type
(5 holes)

[Side] screws

B'

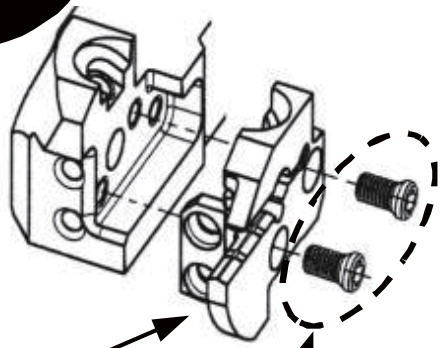

Medium type
Short type
(4 holes)

[Side] screws

C

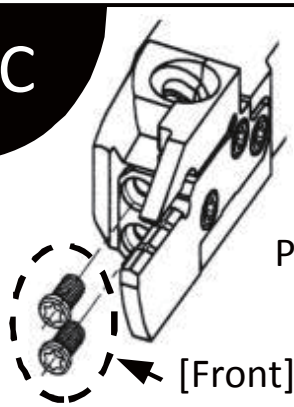

Screws : TS407
Wrench : TKY15D
Torque : 3.5 Nm
31 lbf-in

Please tighten the TS407 screws
in order of [Side] → [Front].

[Front] screws

Attention) Be careful enough so that there is a sharp part in the product when you set it.

Attention)

Please use it in recommended cutting condition.

While using exceeded cutting condition, The modular blade might be damaged as shown. And with the chatter vibration will make similar damage even if using it short time.

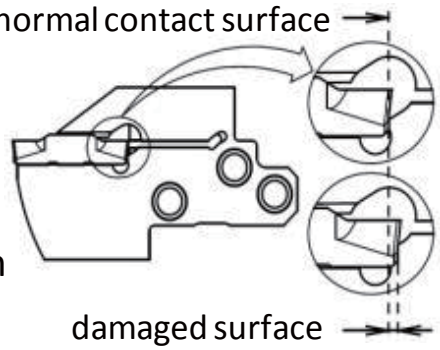

Mitsubishi materials corporation
Copyright all rights reserved.
http://www.mitsubishicarbide.com

MITSUBISHI
MITSUBISHI MATERIALS

Printed Sep.2011